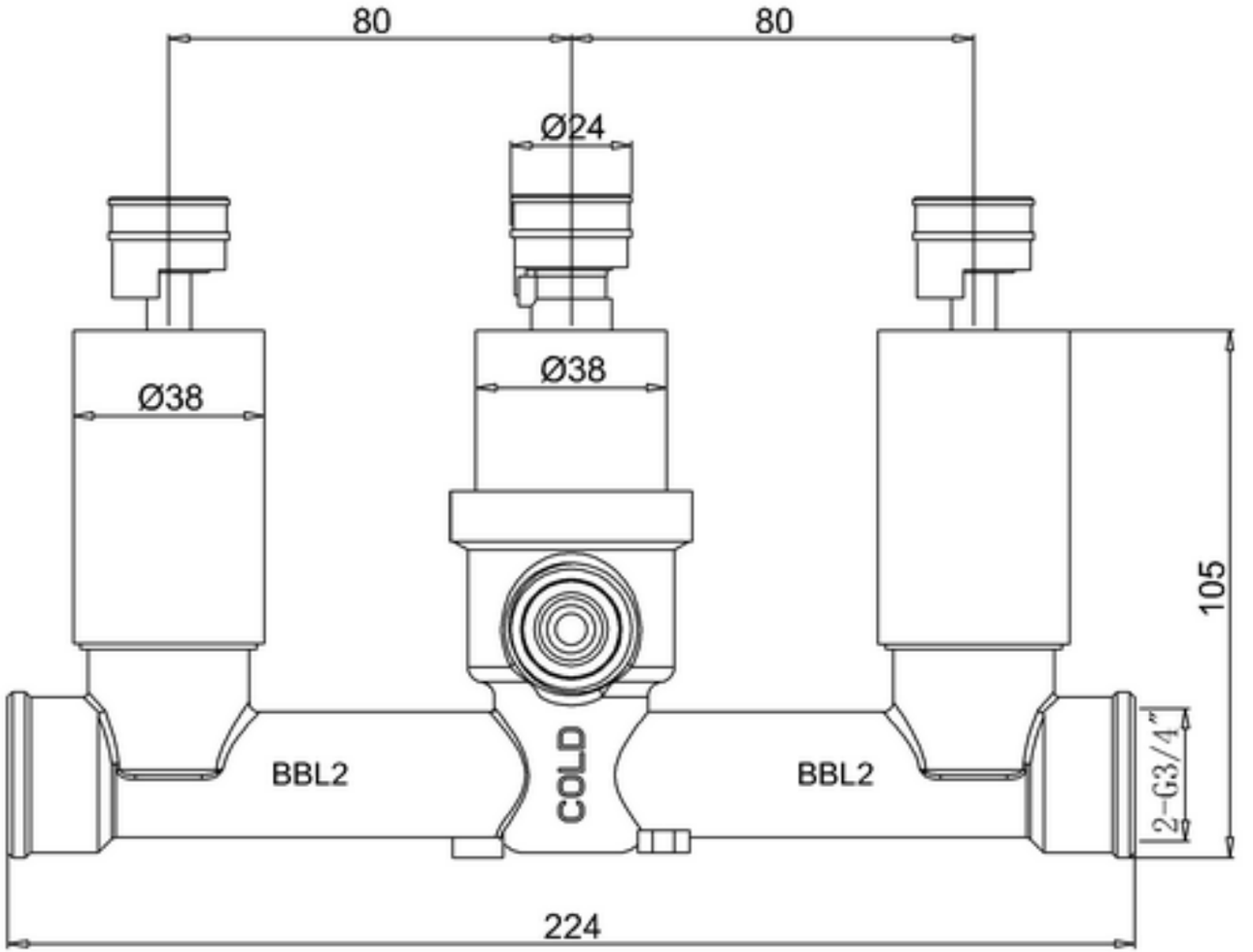
80
80
Ø24
Ø38
Ø38
105
BBL2
COLD
BBL2
2-G3/4"
224

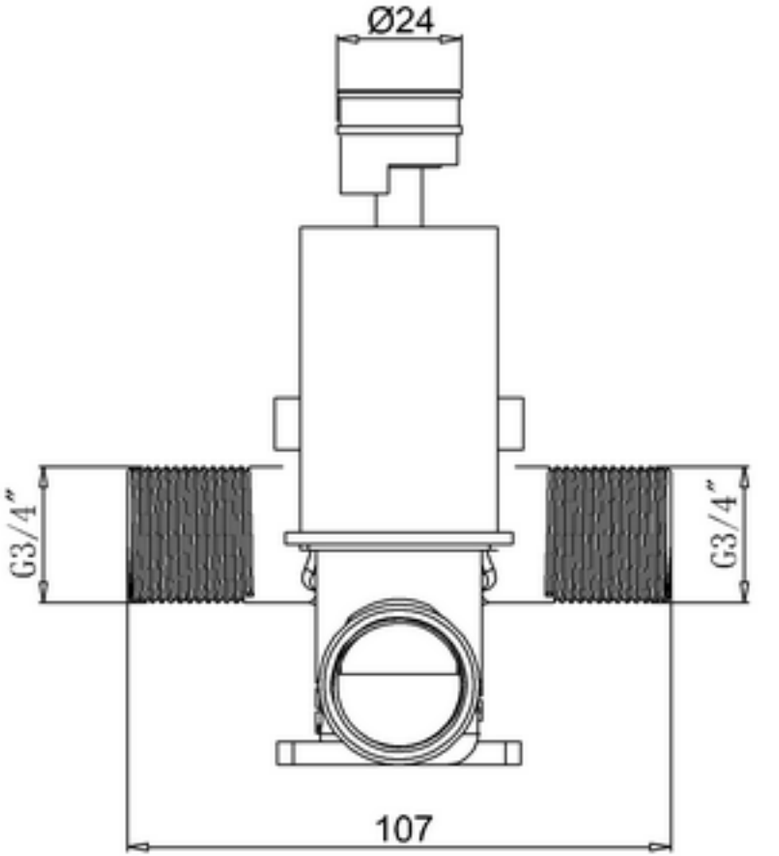
Ø24
G3/4"
G3/4"
107

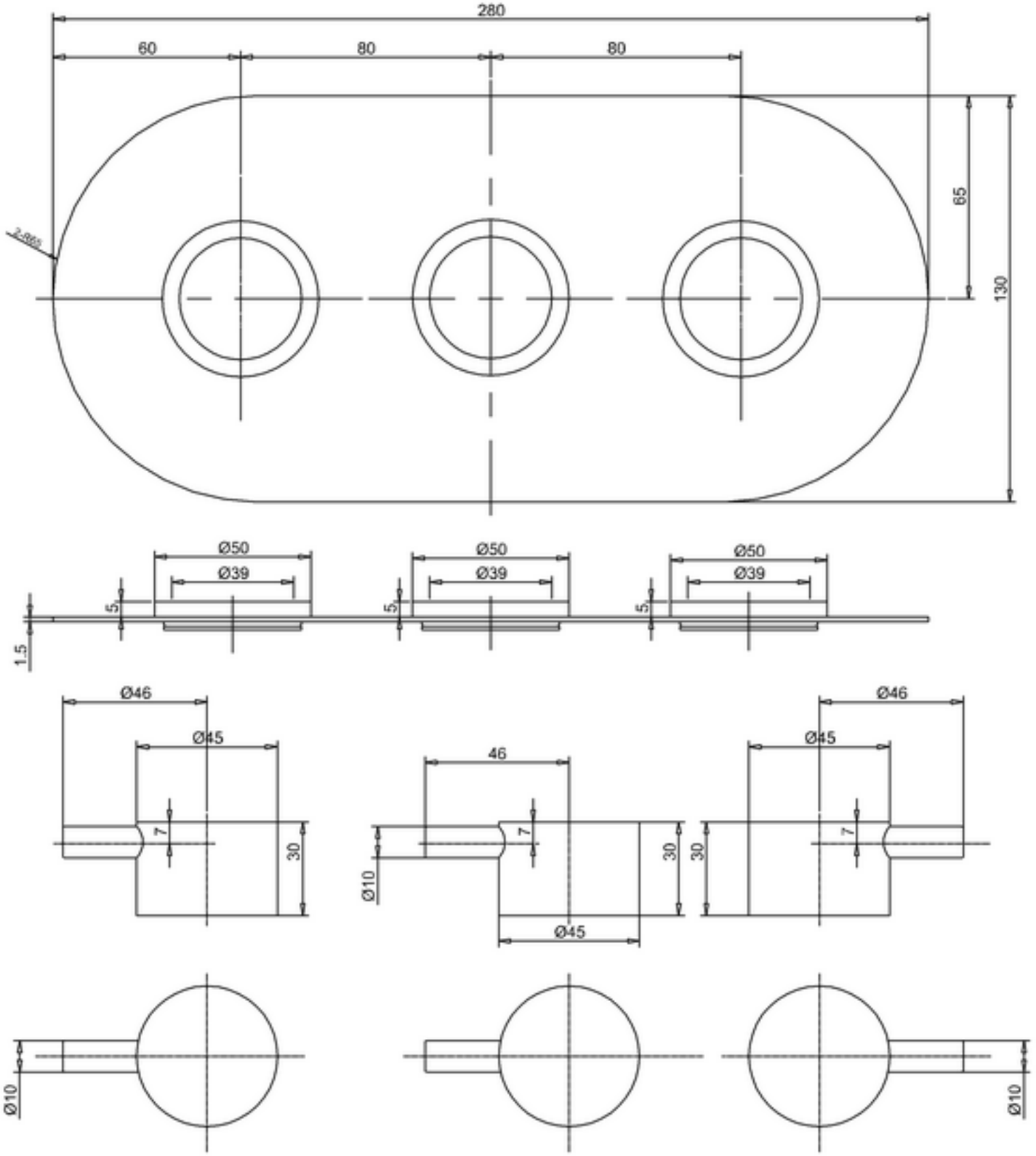
280
60
80
80
65
130
2-R65
Ø50
Ø39
5
1.5
Ø46
Ø45
7
30
46
Ø10